No	Name	Material	Remark
1	Base material	BeCu 0.13t	
2	Plating	Gold	
3			
4			

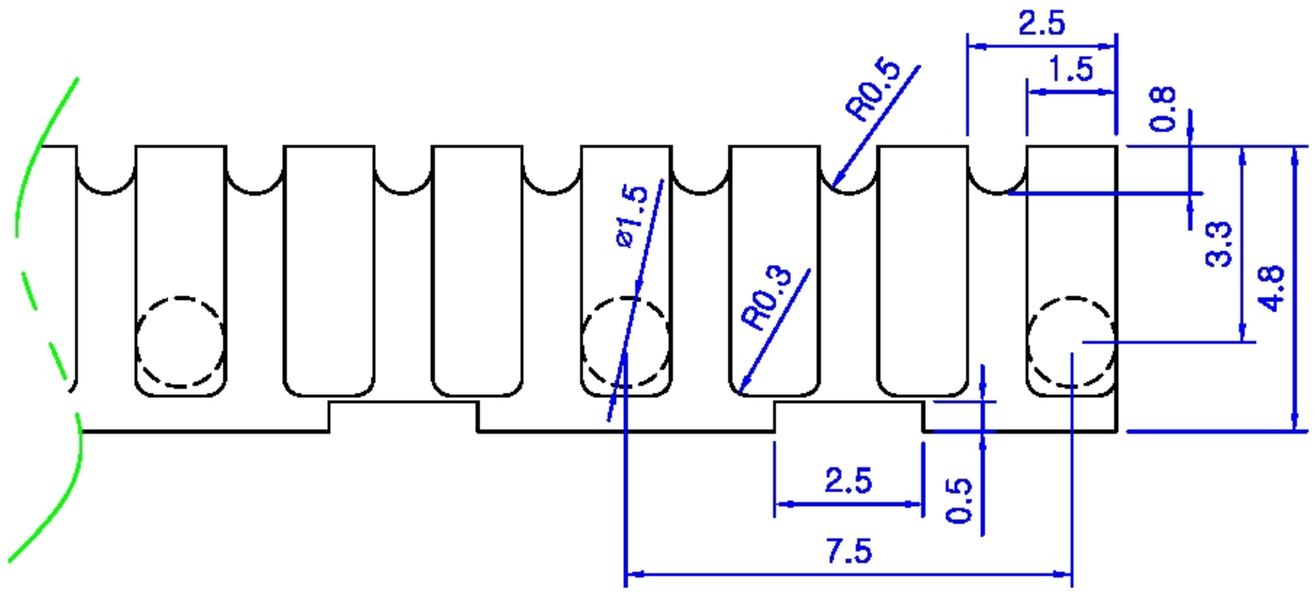

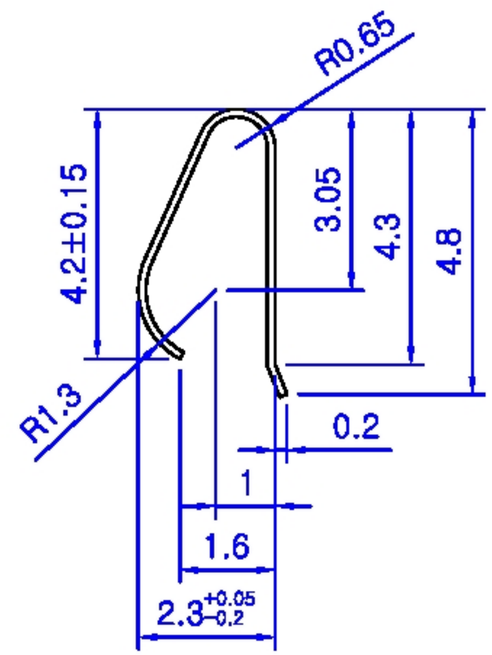

Designed by	Reviewed by	Approved by	Rev	Date	Description	Revised	Checked	Part No	FEA616		TITLE	FINGER STRIP GASKET
								DWG No	ES-DWG0079			
								Unit	mm	General Tolerance	Form	
2007. 5 . 18 .	2007. 5 . .	2007. 5 . .						SCALE	1 / 1	PROJECTION	E-Song	E-Song Ameirca, Inc.